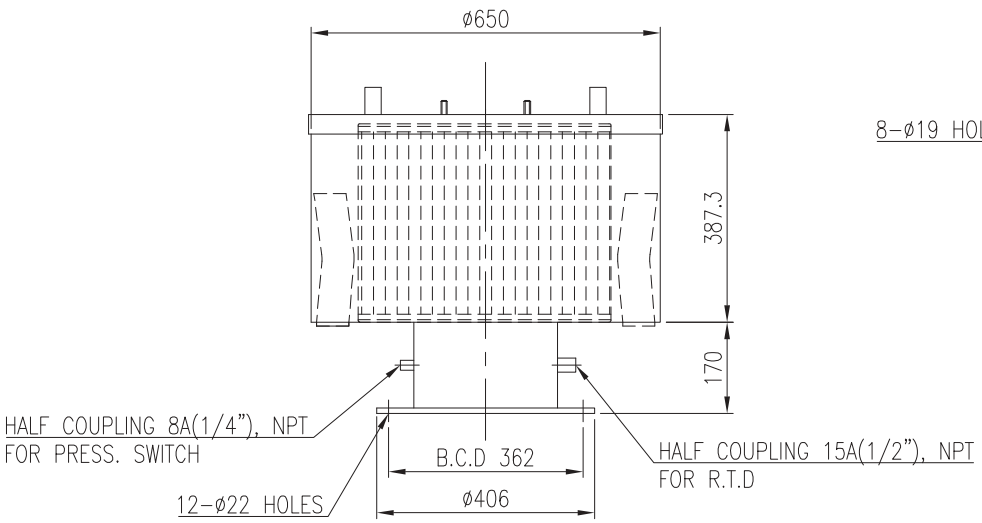

INLET FILTER & SILENCER

TYPE	CAPACITY	FILTER ELEMENT	WEIGHT
FS-923-1000F	4,500 m³/Hr	10MICRON	65 kg

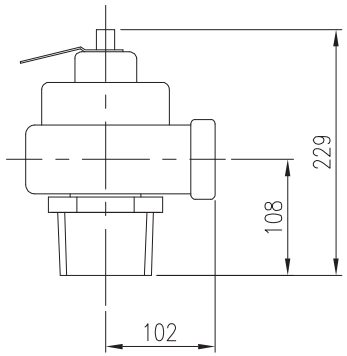

SAFETY VALVE

TYPE	IN & OUT SIZE	CAPACITY	SET PRESS.	WEIGHT
KUNKLE 337	3B(80A)	4,147 m³/Hr	1.2 bar	9.07kg

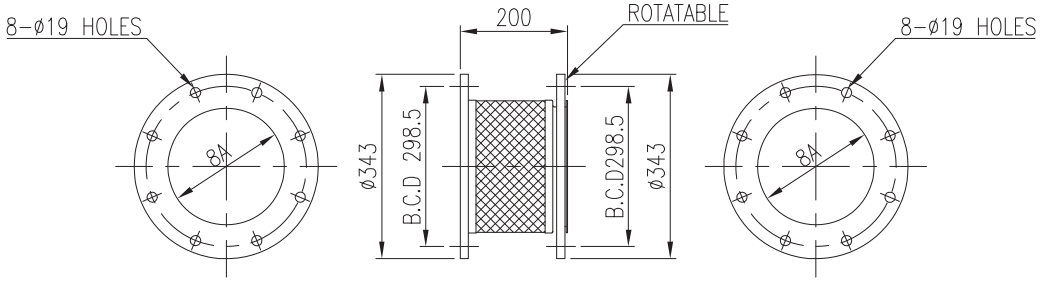

FLEXIBLE JOINT

TYPE	TEMP.	PRESS.
DISCHARGE	Below 220° C	Below 7.0 bar

FOR CONSTRUCTION

THIS DRAWING IS THE PROPERTY OF DMPP CONSORTIUM.
IT IS NOT TO BE COPIED OR USED IN ANY WAY DETRIMENTAL TO THE COMPANY.

Rev.	Date	Prepared	Checked	Approved	Details of Revision
0	31.03.2016	C.N.JIN	D.M.L.	C.E. Kim	FOR CONSTRUCTION

Client: EVN — VIETNAM ELECTRICITY

Owner's Engineer: EVNPECC3 — POWER ENGINEERING CONSULTING JSC 3

Contractor: DOOSAN, Mitsubishi Corporation, EVNPECC2, PACIFIC

Sub-Suppliers: BDH CO., LTD.

Project: VINH TAN 4 THERMAL POWER PLANT PROJECT (600MW x 2 units)

	Date	Name	Scale
Prepared	31.03.2016	C.N.JIN	Title: FLY ASH TRANSPORT BLOWER ACCESSORIES DWG.
Checked	31.03.2016	D.M.L.	
Approved	31.03.2016	C.E. Kim	
Dept.	BLR AQCS		

PC: VT4
UAS Code: DP00
Unit Code: P0
KKS Code: ETG
Reg. No: 510008
Rev.: 0
Drawing No.: VT4-DP00-P0ETG-510008
Page-No. 6 of 24

A4 (297x210)